HD and HDL Single-Stage Non-Lube Gas Compressors

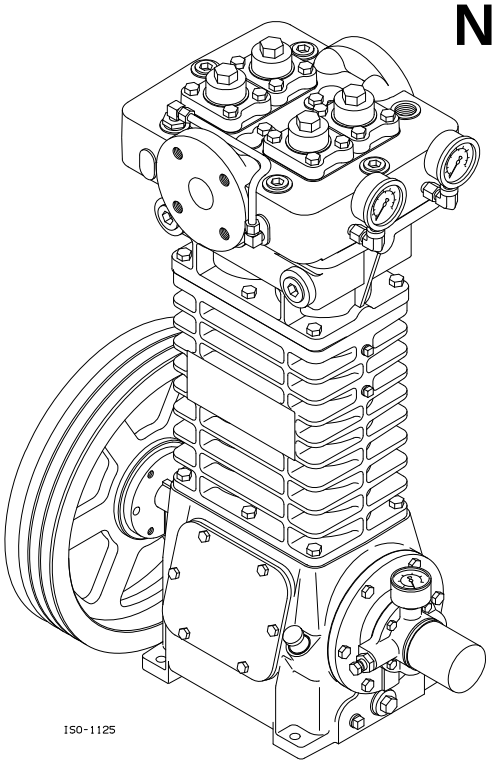

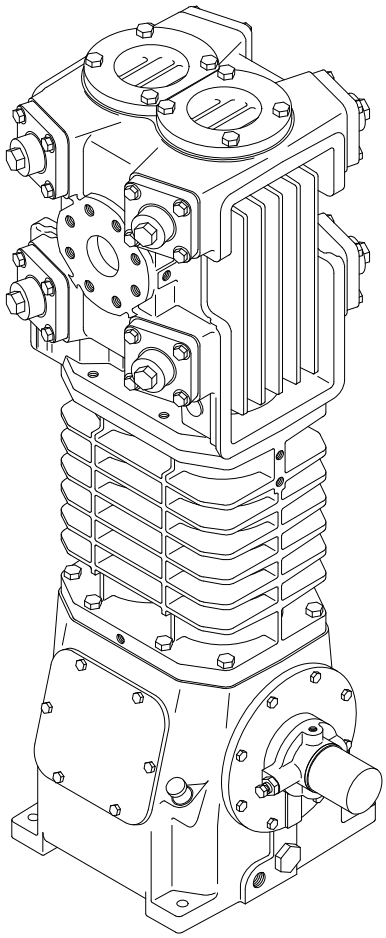

Air
Allene
Ammonia
Argon
Benzene
Bromotrifluormethane
Butadiene
Butane
Carbon Dioxide
Carbon Monoxide
Carbon Tetrachloride
Carbon Tetrafluoride
CFC's
Chlorine
Chlorodifluoromethane
Chloroform
Chlorotrifluoroethylene
Chlorotrifluoromethane
Cyanogen
Cyclohexane
Cyclopropane
Deuterium
Dibromodifluoromethane
Dichlorodifluoromethane
Dichlorofluoromethane
1,2 Dichlorotetra-fluoroethane
1,1 Difluoro 1-Chloroethane
Dimethylamine
Dimethyl Ether
2,2 Dimethylpropane
Ethane
Ethyl Alcohol
Ethyl Chloride
Ethylene
Ethylene Oxide
HCFC's
Helium
n-Heptane
n-Hexane
Hydrogen
Hydrogen Chloride
Hydrogen Sulfide
Isobutane
Isobutene
Isobutylene
Isopentane
Methane
Methanol
Methyl Acetylene
Methyl Acetylene Propadiene
Methyl Chloride
Methyl Mercaptan
Monoethylamine
Natural Gas
Neon
Nitrogen
Nitrogen Dioxide
Nitrous Oxide
Oxygen
Ozone
n-Octane
n-Pentane
Propane
Propylene
Refrigerants
Sulfur Dioxide
Sulfur Hexafluoride
Trichlororethane
Tetrafluorethylene
Trimethylamine
Vinyl Chloride
Xenon
...and others

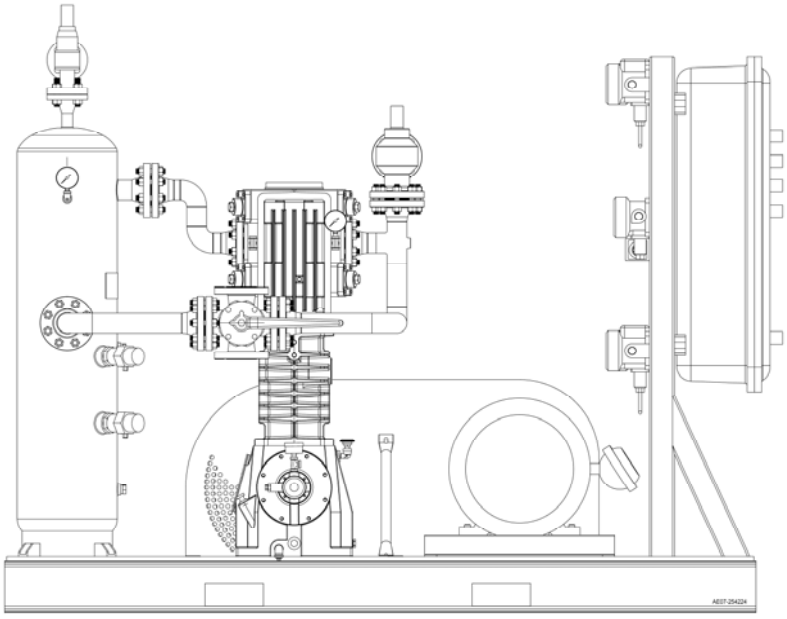

SPECIFICATIONS

Model Single-Seal / Double-Seal / Triple-Seal	HD161 / HD162 / HD163	--- / HDL322 / HDL323	--- / HDL342 / HDL343	HD361 --- / HD362 HDL362 / HD363 HDL363
Number of Cylinders	2	2	2	2
Bore - in. (mm)	3.0 (76.2)	2.0 (51)	2.69 (68)	4.0 (102)
Stroke - in. (mm)	2.5 (63.5)	3.0 (76)	3.0 (76)	3.0 (76)
MAWP - psia (bar)	350 (24.1)	1,000 (68.9)	750 (51.7)	350 (24.1)
Piston rod dia. - in. (mm)	0.75 (19.1)	0.75 (19.1)	0.75 (19.1)	0.75 (19.1)
Min./Max. Speed (rpm)	350 / 825	350 / 825	350 / 825	350 / 825
Piston Displacement @ 100 rpm - CFM (m^3/hr) @ Min rpm - CFM (m^3/hr) @ Max rpm - CFM (m^3/hr)	 2.05 (3.48) 7.16 (12.2) 16.9 (28.7)	 1.09 (1.85) 3.81 (6.49) 9.00 (15.3)	 1.97 (3.34) 6.89 (11.71) 16.25 (27.6)	 4.36 (7.41) 15.3 (26.0) 36.0 (61.2)
Max. Discharge Temperature	350°F (176°C)	350°F (176°C)	350°F (176°C)	350°F (176°C)
Max. BHP (kw)	10 (7.5)	15 (11)	15 (11)	15 (11)
Approx Wt. w/ Flywheel	225 lb (102 kg)	385 lb (175 kg)	385 lb (175 kg)	365 lb (166 kg)
Coolant Connections (HDL only)	---	3/4" NPT	3/4" NPT	3/4" NPT
Inlet & Outlet	0.75" NPT	1.5" ANSI 600#	1.5" ANSI 600#	1.5" ANSI 300#

Model Double-Seal / Triple-Seal	HDL642 / HDL643	HD602 HDL602 / HD603 HDL603	HD942 HDL942 / ---
Number of Cylinders	2	2	2 (Double Acting)
Bore - in. (mm)	3.25 (82.5)	4.625 (117)	4.625 (117)
Stroke - in. (mm)	4.0 (102)	4.0 (102)	4.0 (102)
MAWP - psia (bar)	750 (51.7)	350 (24.1)	350 (24.1)
Piston rod dia. - in. (mm)	1.25 (31.8)	1.25 (31.8)	1.25 (31.8)
Min./Max. Speed (rpm)	350 /825	350 /825	350 / 825
Piston Displacement @ 100 rpm - CFM (m^3/hr) @ Min rpm - CFM (m^3/hr) @ Max rpm - CFM (m^3/hr)	 3.84 (6.5) 13.4 (22.8) 31.7 (53.8)	 7.78 (13.2) 27.2 (46.3) 64.2 (109.0)	 14.99 (25.47) 52.46 (89.1) 125.2 (212)
Max. Discharge Temperature *	350°F (176°C)	350°F (176°C)	350°F (176°C)
Max. BHP (kw)	40 (30)	40 (30)	50 (37)
Approx Wt. w/ Flywheel	705 lb (320 kg)	705 lb (320 kg)	905 lb (410 kg)
Coolant Connections (HDL only)	1" NPT x 3/4" NPT	1" NPT x 3/4" NPT	1/2" NPT
Inlet & Outlet, NPT - in.	2" 600# ANSI	2" ANSI 300#	2" ANSI 300#

'HD' models are air-cooled; 'HDL' models are liquid-cooled

For sour gas applications; see CB-311 re 'HDS' Series.

* Compression Ratios are normally limited by discharge temperature. High compression ratios and certain gases can cause excessive heat, i.e. over 350°F (176°C). The duty cycle must provide for adequate cooling time between periods of operation to prevent excessive operating temperature.

Typical Applications

- Vapor Recovery
- Gas Gathering
- Gas Transfer
- Gas Evacuation
- Enhanced Recovery
- Gas Blanketing
- Pressure Boosting
- Flare Elimination
- Leak Test Recovery
- Liquid Gas Transfer

TYPICAL MOUNTING STYLES

-CO Compressor with flywheel.

-B Compressor mounted on a baseplate with V-belt drive system with guard and motor slide base ready to accept but less motor.

-TU -B Unit plus a mechanical liquid trap, NPT piping and pressure gauges.

-TC -B Unit plus an ASME code liquid trap, high liquid level switch, NPT piping and pressure gauges.

-TW -B Unit plus an ANSI flanged trap, high liquid level switch, welded piping and pressure gauges.

-LU -TU Unit plus 4-way valve, inlet strainer, and NPT interconnecting piping.

-LC -TC Unit plus 4-way valve, inlet strainer, and NPT interconnecting piping.

-LW -TW Unit plus 4-way valve and welded interconnecting piping.

MATERIALS OF CONSTRUCTION

Cylinder & Head	Ductile Iron (A536 65-45-12 Nodular)
Pistons	Steel (100, 300 & 600 series), Ductile Iron (900 series)
Piston Rings	Glass & Moly Filled PTFE (Other materials available)
Piston Rods	BSR Steel (Chrome Oxide Coated available)
Valve Seats & Stops	Steel with TNT-12 Impregnation; SS available (100 series)
	Ductile Iron: TNT-12 Impregnation available (300, 600 & 900 series)
Valve Plates	Stainless Steel (100 series)
	PEEK (300, 600 & 900 series)
Valve Springs	Stainless Steel
Rod Packing	PTFE
Crankshaft	Ductile Iron (A536 80-60-03 Nodular)
Connecting Rods	Ductile Iron (A536 60-40-18 Nodular)
Wrist Pin	Steel
Bearing, Wrist Pin	Steel Needle Bearing
Bearings, Rod	Babbitt Lined Steel Backed
Bearings, Crank	Tapered Roller
O-rings	Buna-N (PTFE, FKM, Neoprene, Ethylene Propylene available)
Metal Gaskets	Iron
Other Gaskets	Fiber (non Asbestos)
Crosshead Guide	Ductile Iron (A536 65-45-12 Nodular)
Crankcase & Crosshead	Gray Iron

STANDARD FEATURES

Ductile Iron Head & Cylinder provide toughness & strength unmatched by cast iron.

Water-cooled head & cylinders on HDL models reduce operating temperatures and extend wear life.

High efficiency PEEK (Poly Ether Ether Ketone) valve plates provide extended life due to the low mass and self-lubricating qualities of the PEEK material. In addition, the slight 'give' of a plastic versus a metal plate allows it to survive more abuse and provide better sealing throughout the life of the valve. (300, 600 & 900 series)

High efficiency stainless steel valve plates with steel seats and bumpers are impregnated with TNT-12, a proprietary mixture of PTFE and Nickel. The result is a self-lubricating valve with excellent corrosion resistance and extremely long life. (100 Series)

Extra thick PTFE piston rings provide more wear surface to provide greater ring life.

O-ring head seals provide positive sealing under all operating conditions. No asbestos to worry about, and materials are available to suit any application.

Triple-Seal (double distance piece), Double-Seal (single distance piece) and Single-Seal (no distance piece) models allow precise leakage control and minimize product contamination.

The center head bolts do not pass through the gas chambers and thus do not require a head bolt gasket. No gasket, no leakage source!

One piece steel or ductile iron pistons are attached to the piston rod via one positive locking nut.

ANSI Flanged Connections allow maximum piping flexibility. (300, 600 & 900 series)

Steel wrist pins ride on steel needle bearings for extra life under severe conditions.

Self-adjusting PTFE piston rod seals provide maximum sealing & minimum friction.

Iron crossheads feature special machined lube channels for maximum lubrication and wear resistance.

Crankcase is pressure lubricated via a self reversing oil pump directly driven by the crankshaft. Oil is fed to all bearing surfaces, including the crosshead. An automotive type spin-on oil filter is standard.

No brass or copper is present in the compressor.

OPTIONS

TNT-12 corrosion & wear resistant treatment
Various O-ring materials
Suction valve unloaders

Alternate piston ring materials
Extended crankshaft
Oversized flywheels

Aluminum or stainless steel belt guards
Pressure switches
Temperature switches
Temperature gauges
Thermowells
Vibration switches
Level switches
Control panels and starters
Liquid traps
NPT or welded piping systems

Epoxy paint systems
Pressure gauges
Receivers
Capacity control bypass systems
Relief valves
Shutoff Valves - manual or powered
Inlet strainers
Aftercoolers - air or water-cooled
Motor or engine drives
Repair tool kits

DIMENSIONS

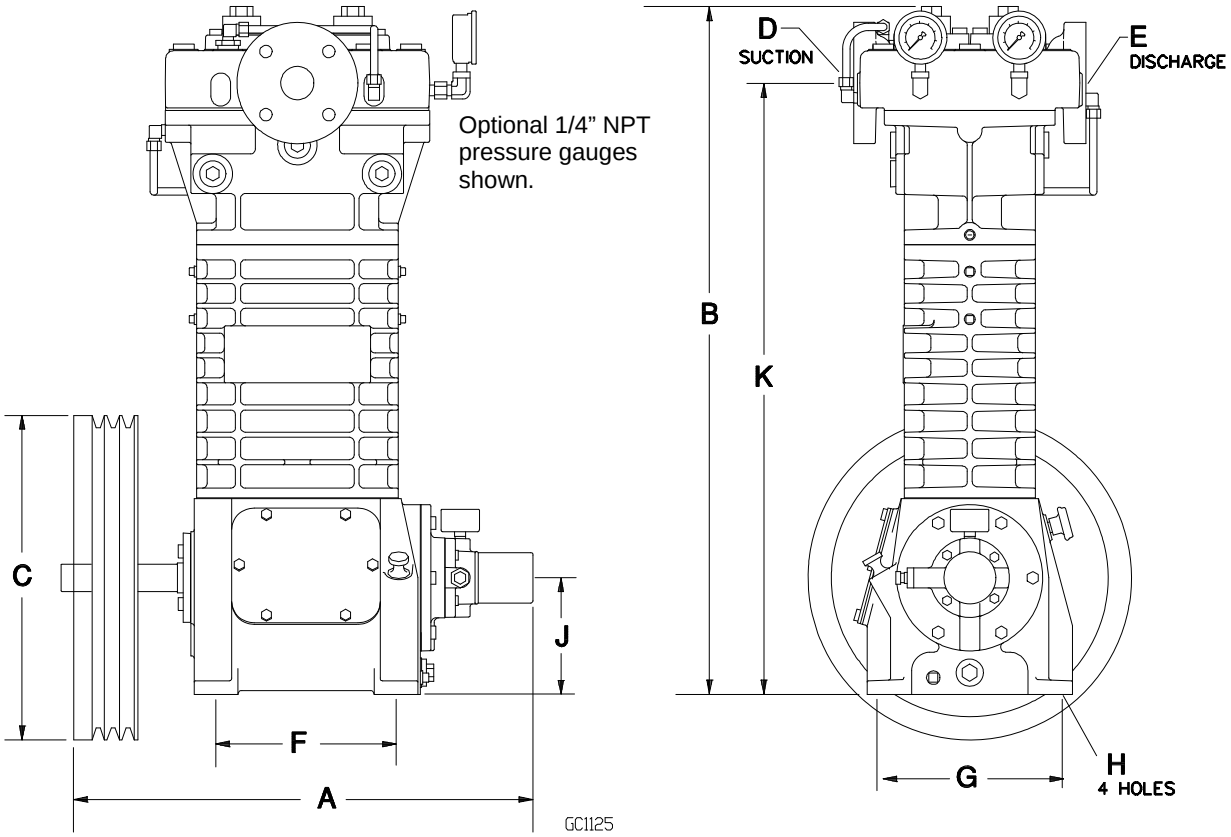

In. (mm)

Model	A	B *	C	D	E	F	G	H	J	K
HD161	21.9 (556)	25.7 (653)	16.35 (415)	0.75" NPT	0.75" NPT	7.5 (190)	7.38 (187)	0.44 (11)	5.38 (137)	23.34 (593)
HD162		29.7 (754)								27.34 (694)
HD163		33.7 (856)								31.34 (796)
HD361	23.4 (594)	30.0 (763)	16.35 (415)	1.5" ANSI 300#	1.5" ANSI 300#	9.12 (232)	9.37 (238)	0.5 (12.7)	5.88 (149)	26.13 (663)
HD362 HDL322 HDL342 HDL362		34.7 (880)								30.79 (782)
HD363 HDL323 HDL343 HDL363		39.3 (998)								35.4 (900)
HD601 HD602 HDL602 HDL642	25.6 (650)	41.1 (1,042)	20.35 (517)	2" ANSI 300#	2" ANSI 300#	10.5 (267)	12.0 (305)	0.56 (14.2)	8.25 (210)	37.0 (940)
HD603 HDL603 HDL643		47.1 (1,196)								43.1 (1,095)

* For units with Unloaders: 100 Series - add 2.7" (69 mm), 300 & 600 Series - add 1.6" (40 mm)..

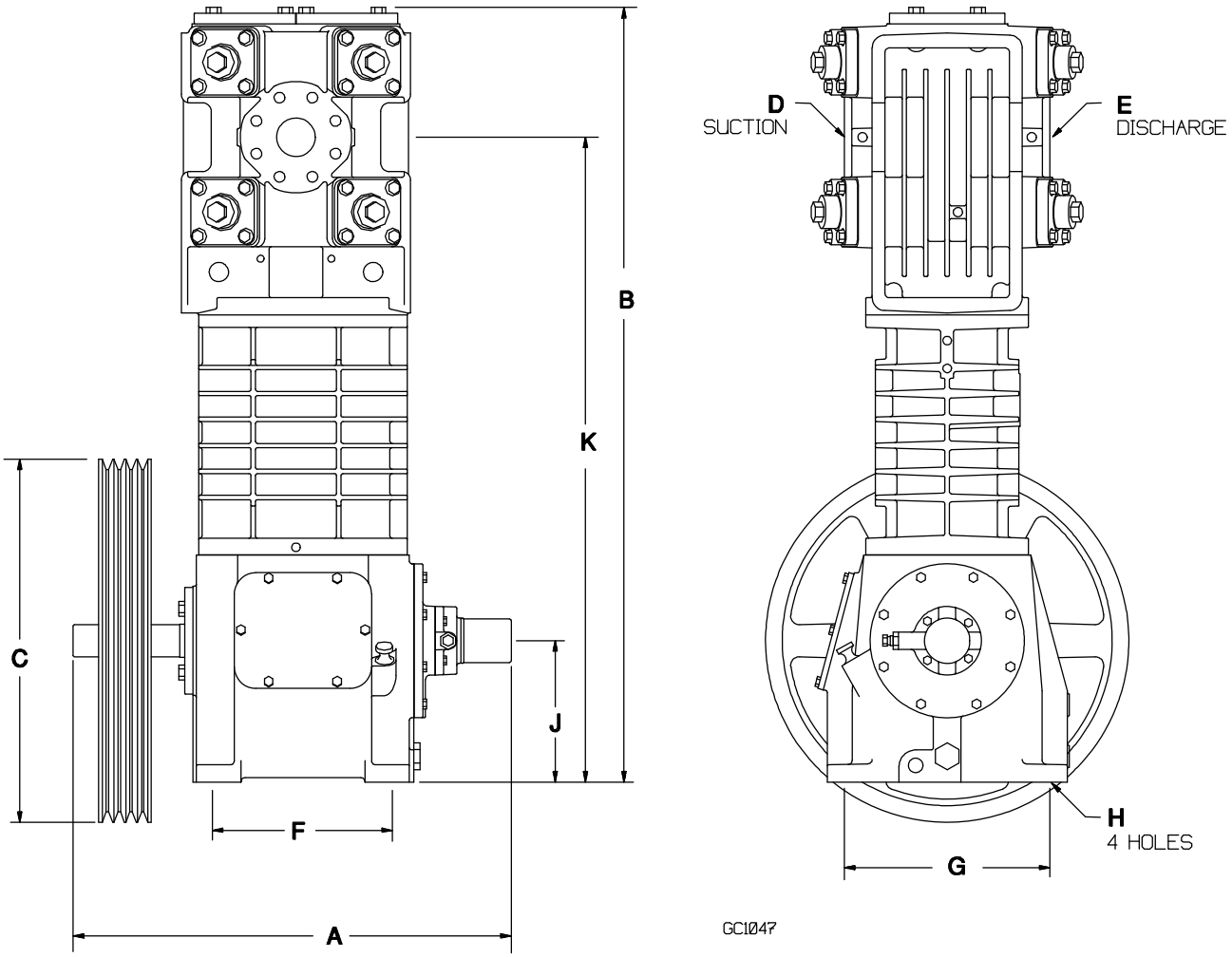

In. (mm)

Model	A	B	C	D	E	F	G	H	J	K
HD942	25.56 (649)	45.23 (1,149)	21.2 (538)	2" ANSI 300#	2" ANSI 300#	10.5 (267)	12.0 (305)	0.56 (14.2)	8.25 (210)	37.63 (956)
HDL942		45.84 (1,164)								

Distributed by:

3, Poruchik Nedelcho Bonchev Str., fl. 5, 1528 Sofia, Bulgaria
tel: +359 2 973 27 67, e-mail: office@daisglobal.eu