TYPICAL DIMENSIONS – LB COMPRESSORS

Liquid Transfer / Vapor Recovery Units

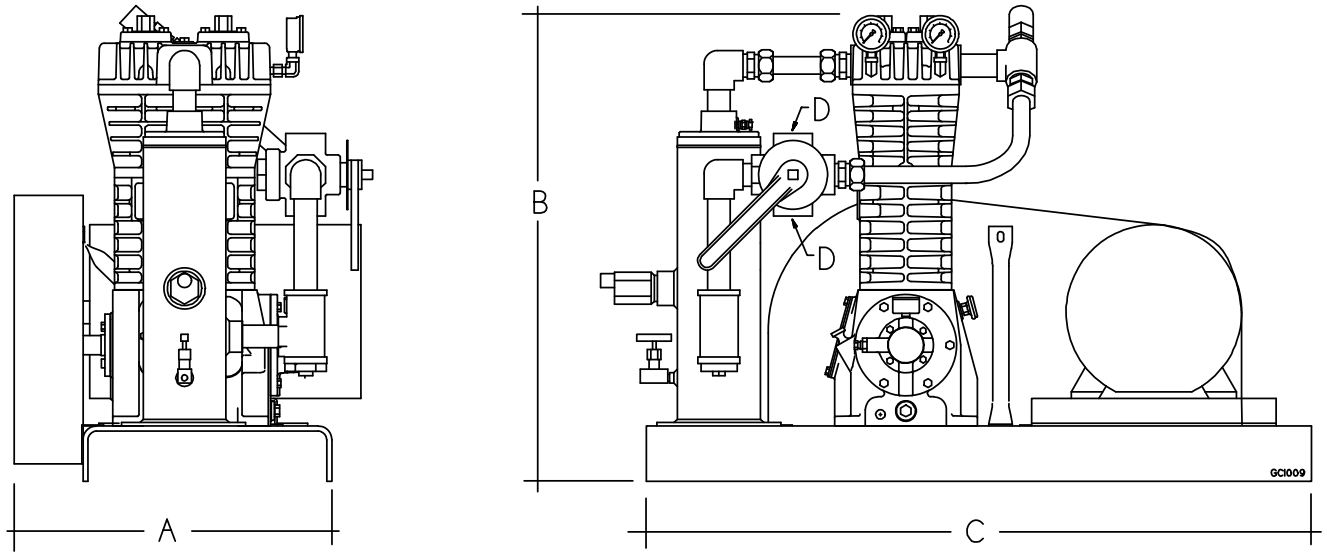

In. (cm)

Model	A	B	C	D
LB161B-LU	20 (51)	32½ (83)	44 (112)	1" NPT
LB162B-LU	20 (51)	36½ (93)	44 (112)	1" NPT
LB361B-LU	23 (58)	34½ (88)	48 (122)	1¼ " NPT
LB362C-LU	23 (58)	39 (99)	48 (122)	1¼ " NPT
LB601B-LU	29 (74)	46 (117)	54 (137)	1¼ " NPT
LB602C-LU	29 (74)	46 (117)	54 (137)	1¼ " NPT
LB942B-LW	36 (91)	72* (183)	76 (193)	2" 300# ANSI

* To top of typical relief valve.

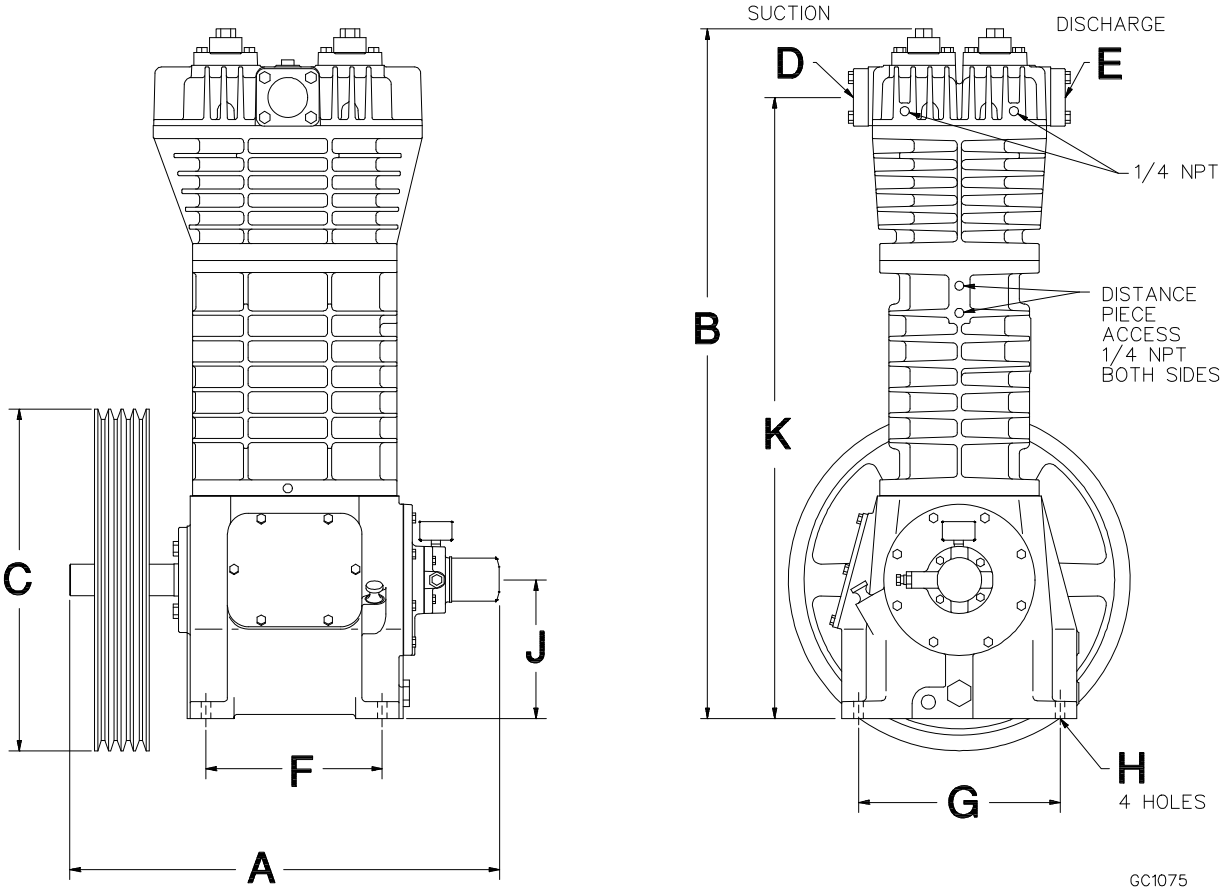

In. (mm)

Model	A	B *	C	D	E	F	G	H	J	K
LB161B	21.9 (556)	25.7 (653)	16.35 (415)	0.75" NPT [1]	0.75" NPT [1]	7.5 (190)	7.38 (187)	0.44 (11)	5.38 (137)	23.34 (593)
LB162B	21.9 (556)	29.7 (754)	16.35 (415)	0.75" NPT [1]	0.75" NPT [1]	7.5 (190)	7.38 (187)	0.44 (11)	5.38 (137)	27.34 (694)
LB361B	23.4 (594)	29.76 (756)	16.35 (415)	1.25"NPT [2]	1.25"NPT [2]	9.12 (232)	9.37 (238)	0.5 (12.7)	5.88 (149)	26.19 (665)
LB362C	23.4 (594)	34.39 (874)	16.35 (415)	1.25"NPT [2]	1.25"NPT [2]	9.12 (232)	9.37 (238)	0.5 (12.7)	5.88 (149)	30.81 (783)
LB601B	25.6 (650)	40.77 (1036)	19.5 (495)	2" NPT [3]	1.5" NPT [3]	10.5 (267)	12.0 (305)	0.56 (14.2)	8.25 (210)	36.99 (940)
LB602C	25.6 (650)	40.77 (1036)	19.5 (495)	2" NPT [3]	1.5" NPT [3]	10.5 (267)	12.0 (305)	0.56 (14.2)	8.25 (210)	36.99 (940)
LB942B	25.6 (650)	45.23 (1,149)	21.20 (538)	2" 300# ANSI	2" 300# ANSI	10.5 (267)	12.0 (305)	0.56 (14.2)	8.25 (210)	37.65 (956)

1 Tapped connections in head.
2 1.5" NPT, 1.25" weld and 1.5" weld available.
3 1.5" NPT, 2" NPT, 1.5" weld and 2" weld available.

Distributed by:

DAIS GLOBAL

3, Poruchik Nedelcho Bonchev Str., fl. 5, 1528 Sofia, Bulgaria
tel: +359 2 973 27 67, e-mail: office@daisglobal.eu